SPECIFICATION

FOR APPROVAL

CUSTOMER	
DESCRIPTION	F3 DIP , 940nm, IRED
MODEL NO.	MEL-F3940 Series
ISSUED DATA	11-APR-2026
DOCUMENT NO.	MJQC-MELF3-260411

[MJ-CHIP CO.,LIMITED.]

ISSUE DEPT.			
ISSUE	REVIEW	Q/A	APPR'L

.

[CUSTOMER APPROVAL]

ISSUE DEPT.					
ISSUE	REVIEW				

Infrared Emitting Diode[ø3 mm]

■ Description

The MEL-F3940 is GaAlAs infrared emitting diode that is designed for high power, low forward voltage. This device is optimized for speed and efficiency at emission wavelength 940nm and has a high radiant efficiency over a wide range of forward current.

■ Features

- 940nm wavelength
- Narrow Angle
- High power and high reliability
- Available for pulse operating
- RoHS Compliance

■ Applications

- IR Audio and
- Optical Switch
- Smart home devices
- Available for Wireless Digital Data Transmission

■ Absolute Maximum Ratings [Ta = 25℃]

Parameter	Symbol	Ratings	Unit
Power dissipation	P_D	160	㎽
Forward current	I_F	100	㎃
Pulse forward current *1	I_{FP}	0.5	A
Reverse voltage	V_R	5.0	V
Operating temp.	Topr.	-25 ~ +85	℃
Storage temp.	Tstg.	-30 ~ +100	℃
Soldering temp. *2	Tsol.	260	℃

*1. Duty ratio=1/100, pulse width=0.1ms
*2. Lead Soldering Temperature (3mm from case for 5sec).

■ Electro-optical Characteristics[Ta= 25℃]

Parameter	Simbol	Condition	Min.	Typ.	Max.	Unit
Forward voltage	V_F	I_F=20 mA	-	1.2	1.3	V
Reverse current	I_R	V_R=5V	-	-	10	μA
Capacitance	C_J	f=1MHz	-	20	-	pF
Radiant intensity	Ie	I_F=20mA	-	25	-	mW/sr
Peak emission wavelength	λp	I_F=20mA	-	940	-	nm
Spectral bandwidth 50%	Δλ	-	-	45	-	nm
Half angle	e/2	-	-	±30	-	deg.

■ Reliability test

Test Parameter	Reference Criterion	Test Condition	Time	Quantity	Ac/Re
Resistance to Solder Heat	JESD22-B106	260℃±5℃	10 sec	22PCS	0/1
Temperature cycle	JESD22-A104	+100℃(15min) 5min -10℃(15min)	50 cycles	22PCS	0/1
Thermal Shock	JESD22-A104	+100℃(15min) 5min -30℃(15min)	50 cycles	22PCS	0/1
High Temperature storage	JESD22-A103	+100℃	1000H	22PCS	0/1
Low Temperature storage	JESD22-A119	-40℃	1000H	22PCS	0/1
Life Test	JESD22-A108	IF=100mA	1000H	22PCS	0/1

■ Dimension [mm]

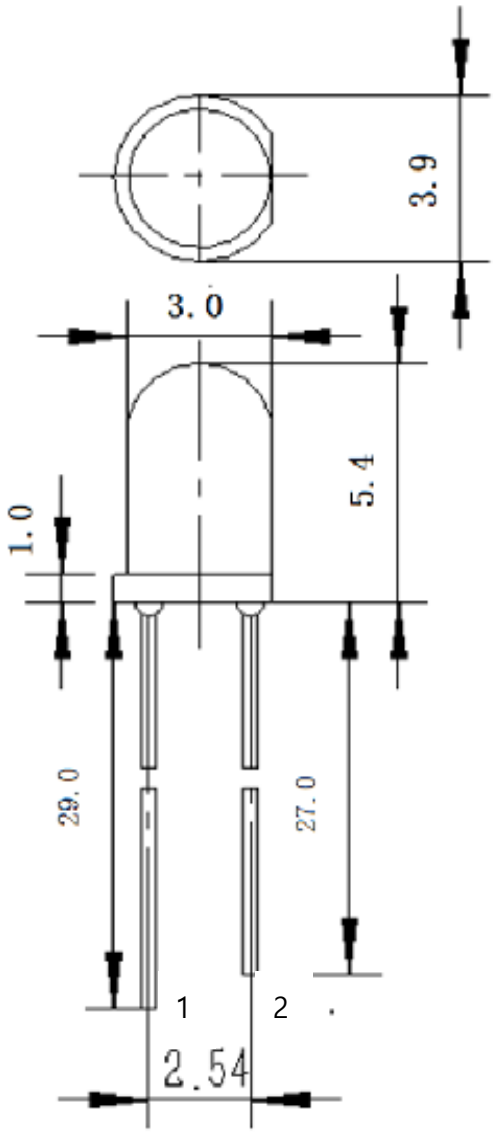

- General tolerance : ±0.2
- Pin Configuration

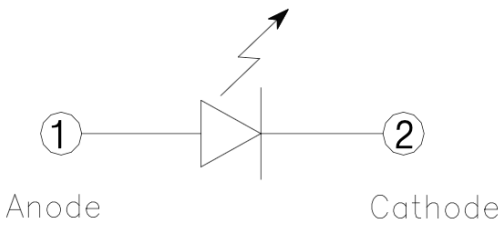

Inspection Criteria

1. In electrical-optical characteristics, 100% inspection be done on following 3items.
   - Forward Voltage : VF
   - Reverse Current : IR
   - Radiant Intensity : Ie

2. No particular inspections shall be carried out for items other than those above.
   However they shall satisfy the ratings.

Caution On Usage

1. Store and use where there is no exterior force that will cause change in shape etc.
2. Store and use where is no Hydrogen Sulfide gas, or any other corrosive gas.
3. The bending or cutting of the lead should be done in room temperature and no force applied on the package.
4. Solder the lead pin under the conditions of the characteristics chart, and do not apply force on the lead pin after soldering.

Guarantee Period And Scope

1. Period
   1 year after shipment to desired place.
2. Scope
   A replacement of products will be carried out if the problem lies in our company's product, However, no responsibilities will be taken for indirect inconvenience caused

Others

1. Any doubts concerning this specification should be discussed fully by both parties.