SPECIFICATION

FOR APPROVAL

CUSTOMER	
DESCRIPTION	IR RECEIVER MODULE
MODEL NO.	MIR-7 Series
ISSUED DATA	26-JAN-2026
DOCUMENT NO.	MJQC-MIR8S-260225

[MJ-CHIP CO.,LIMITED.]

ISSUE DEPT.			
ISSUE	REVIEW	Q/A	APPR'L

.

[CUSTOMER APPROVAL]

ISSUE DEPT.					
ISSUE	REVIEW				

Important Notice / Product Liability Disclaimer

The information herein is subject to change without notice. This product is intended for general consumer electronics applications only.

MJ-CHIP CO., LIMITED. assumes no liability for damages resulting from improper use or applications beyond specified conditions.

IR Receiver Module for Remote Control System

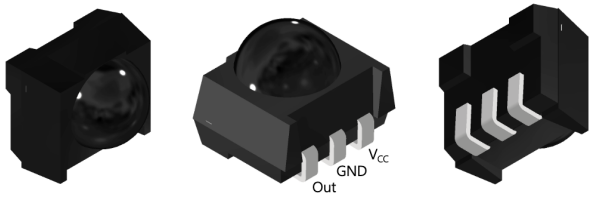

Side View TOP View

Pb-free

e3

RoHS COMPLIANT

HALOGEN FREE

■ Description

The **MIR-7XX series** is an infrared receiver module for consumer electronics requiring stable and accurate IR signal detection. It integrates a high-speed photodiode and a high-performance preamplifier to provide fast response, high sensitivity, and reliable signal processing.

An IR filter epoxy molding compound and internal shielding structure are applied to reduce interference from visible light, electrical noise, and optical noise, ensuring stable operation under various ambient light conditions.

The MIR-7XX series supports both continuous code and **NEC code** signals, enabling compatibility with a wide range of infrared communication protocols.

■ Features

- Supply voltage 2.7~5.5V
- Dedicated high-performance preamplifier for high sensitivity and low noise operation
- IR filter epoxy molding compound to effectively suppress visible light interference
- Integrated internal shielding structure for enhanced immunity to electrical and optical noise
- Stable operation under varying ambient light conditions
- RoHS Compliance

■ Applications

- Televisions and set-top boxes
- Audio and home entertainment systems
- Air conditioners and home appliances
- Smart home devices
- Consumer electronic products requiring infrared remote control functionality

■ Product Ordering Table

NO.	ITEM	Selection options	Unique Product ID
1	MIR (MJ-CHIP IR Receiver module)		MIR
2	Package Type	SMD Type	7
3	Application Code	Normal CODE	3
		Continuous CODE	6
4	Carrier frequency	36.7KHz	1
		37.9KHz	2
		40.1KHz	3
5	Mount View	Top View	T
		Side View	S
6	Customer Code		XXX

"The following part number format is for reference only."

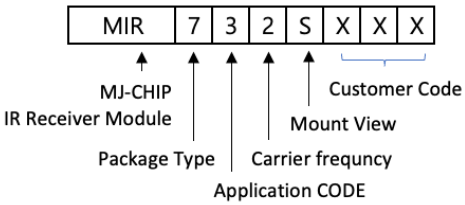

■ IR Receiver Module Selection Options

Data format	Product CODE Select	
	Normal	Continuous
Toshiba	+	+
NEC	+	+
RC5 Philips	+	+
RCA Thompson		+
Sharp		+
Sony 12bit		+
Sony 16 bit		+
Sony 20 bit		+
Matsushita		+
Mitsubishi		+
Zenith		+
JVC		+
Continuous code		+
	Number of pulses	Number of pulses
Minimum burst length tburst (number of pulses per burst)	8 pulses	12
Minimum burst gap tburst_gap (number of pulses per burst)	12 pulses	16
Minimum data pause time (for full frame repeat code)	25mSec	

■ Functional Block Description

The MJ-CHIP IRM series consists of two high-speed photodiodes that convert incoming infrared signals into electrical current signals. These signals are processed by an integrated high-performance preamplifier, which amplifies the received signal while minimizing noise.

An IR filter epoxy molding compound is applied to the package to block visible light wavelengths, ensuring reliable operation under ambient lighting conditions. An internal shielding structure further reduces the impact of external electrical and optical interference, enabling stable signal output. The processed signal is then delivered to the output stage for decoding by the host system.

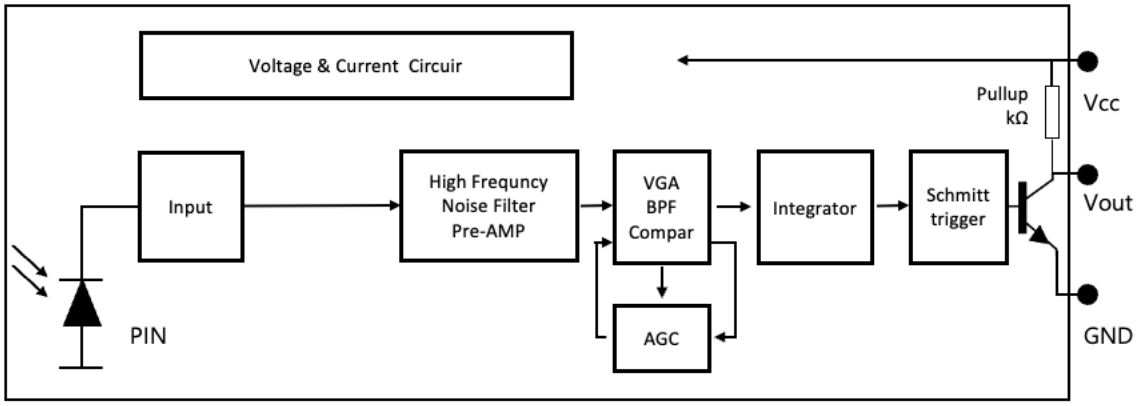

■ Absolute Maximum Ratings

The following ratings represent the absolute maximum limits of the device. Exceeding these limits may cause permanent damage to the device. Operation beyond the recommended operating conditions is not guaranteed.

Parameter	Symbol	Rating	Unit
Supply voltage	$V_{CC.}$	7	V
Supply current	$I_{out.}$	2.5	mA
Operating temperature range	$T_{opr.}$	-20°C～80°C	°C
Storage temperature range	$T_{stg.}$	-25°C～85°C	°C
Soldering temp.*1	$T_{sol.}$	260(Max 5 sec)	°C
Refllow temp. (Pb Free)	$T_{sol.}$	245(Max 10 sec)	°C
MSL(Moisture Sensitivity Levels)	Level-4 (≤30°C / 60% RH 72hours)		
	JEDEC® standard J-STD-020 level 4		

*1. For Max. 5 seconds at the position of 2mm from the package

■ Reliability Test

Parameter	Rating
High Temperature *2	Ta=+80℃, Vcc=5V t=240H
High Temperature / High Humidity *2	Ta=+85℃, 85%RH, Vcc=5V t=240H
Low Temperature *2	Ta=-30℃, Vcc=5V t=240H
Heat Cycle *2	-25℃(0.5H) ～+85℃(0.5H) 20cycle
Dropping *3	Test devices shall be dropped 3 time naturally onto hard wooden board from a 75㎝ height position

*2. Electro-optical Characteristics shall be satisfied after leaving 2hours in the normal temperature

*3. Electro-optical Characteristics shall be satisfied and no deforms and destructions of appearance.

■ Electro-optical Characteristics

Parameter	Symbol	Conditions		Min.	Typ.	Max.	Unit
Supply Voltage Range	V_{CC}			2.7	-	5.5	V
Current Consumption	I_{CC}	No Input Signal	V_{cc}=5V	0.15	0.30	0.55	mA
			V_{cc}=3V		0.28		
Peak Wavelength *4	λ_p			-	940	-	nm
B.P.F Center Frequency	f_o			-	37.9	-	kHz
Arrival Distance *4	L	250Lux	0 °	30	-	-	m
			±30 °	22	-	-	m
			±60 °	12	-	-	m
Directivity	φ1/2	Angle of half transmission distance			± 50		°
High Level Output Voltage *4	V_{OH}	measured at 30 cm on the optical axis		Vcc-0.5	Vcc-0.3	-	V
Low Level Output Voltage *4	V_{OL}			-	-	0.1	V
High Level Output Pulse Width *4	T_{WH}	Burst Wave = 600㎲		400	-	800	㎲
Low Level Output Pulse Width *4	T_{WL}	Period = 1.2㎳		400	-	800	㎲
Output Form	Active Low Output						

*4. It specifies the maximum distance between emitter and detector that the output waveform satisfies the standard(FIG-1,2,3)

■ Measurement Conditions

- Measuring place : Indoor without extreme reflection of light
- Standard transmitter : Burst wave indicated in drawing(FIG-1) of standard transmitter shall be arranged to 1.6Vp-p under the measuring circuit specified in drawing(FIG-1,2)

[FIG.1 : Application Circuit]

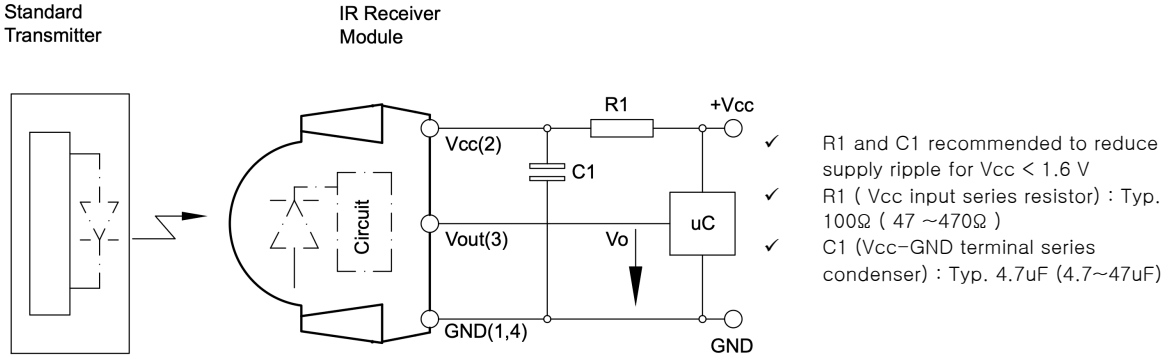

[FIG.2 : Burst wave & Output wave]

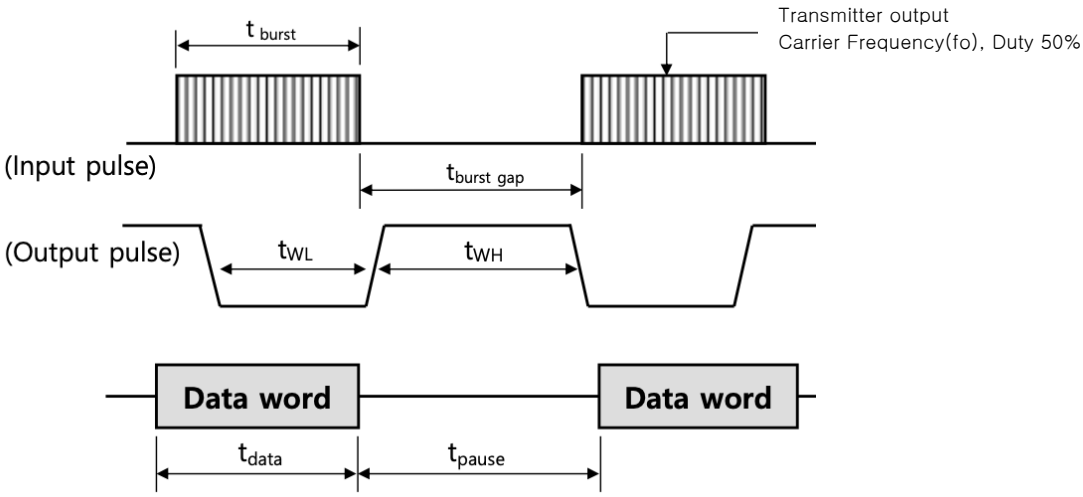

[FIG.3 : Test Condition of Arrival distance]

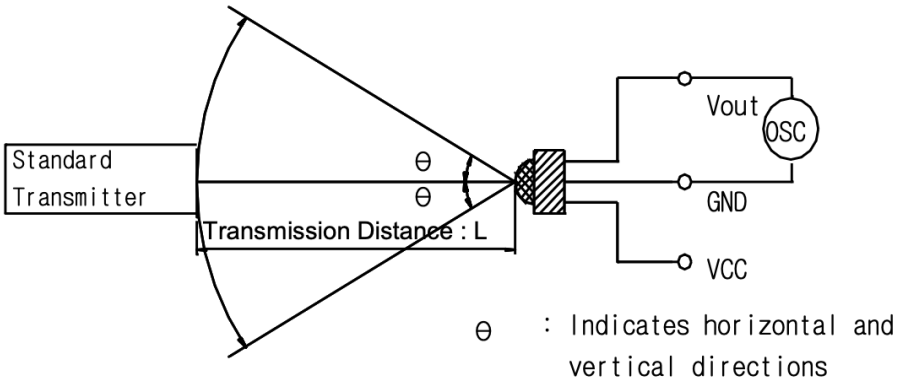

- Ambient light source : Detecting surface illumination shall be irradiate 200±50Lux under ordinary white fluorescence lamp without high frequency lightning

■ Typical Characteristics

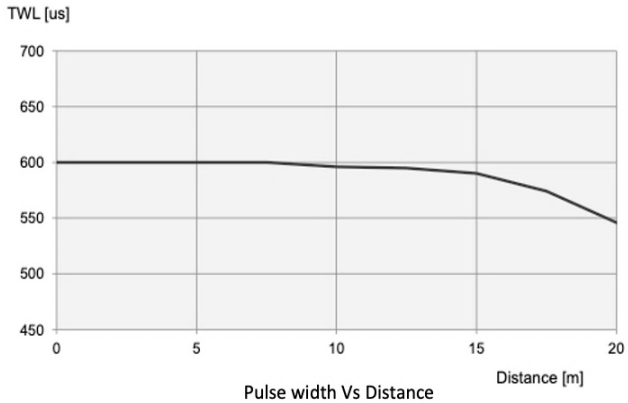

Pulse width Vs Distance

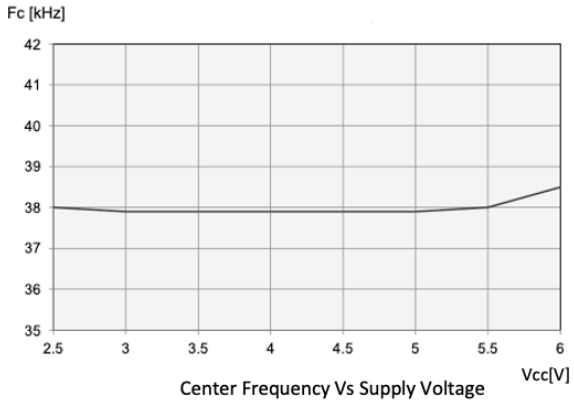

Center Frequency Vs Supply Voltage

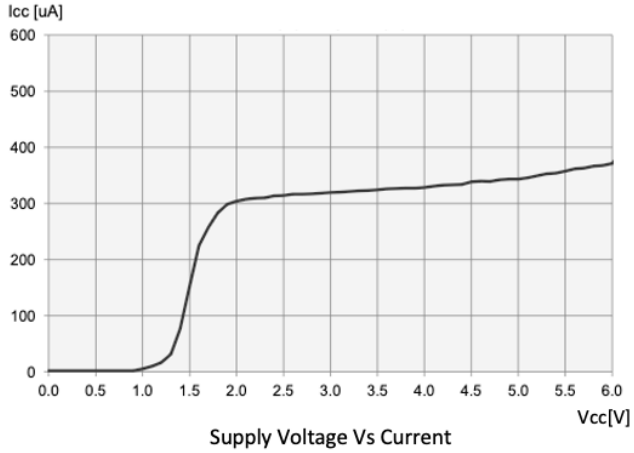

Supply Voltage Vs Current

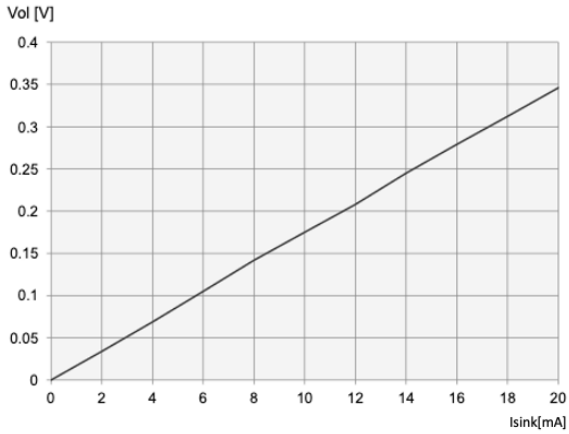

VOL Output Voltage Vs Isink

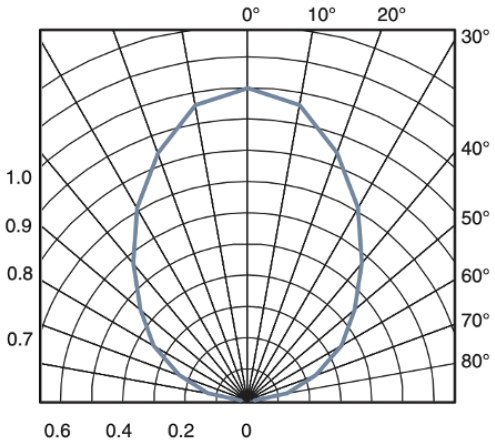

Horizontal Directivity

■ ESD Precautions & Test Circuit

1. ESD Handling Precautions

The IR Receiver Module contains electrostatic-sensitive devices and must be handled in an ESD-controlled environment.

- Handle the module only at ESD-protected workstations.
- Ensure that operators and soldering equipment are properly grounded.
- Use grounded wrist straps, antistatic mats, and conductive containers during handling and assembly.
- Avoid direct contact with module terminals and optical surfaces.
- Improper ESD handling may cause permanent damage or latent reliability degradation.

2. ESD Test Circuit Description (Reference)

The ESD test circuit consists of a high-voltage source, a charging capacitor, and a discharge resistor connected to the IR Receiver Module under test.

Model Parameters

- HBM (Human Body Model)
  - Resistance: 1.5 kΩ
  - Capacitance: 100 pF
- MM (Machine Model)
  - Resistance: 0 Ω
  - Capacitance: 200 pF

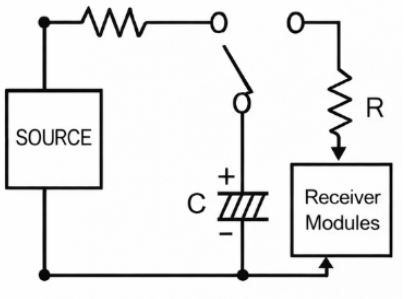

MJ-CHIP Guarantee
IR Receiver Module

- M.M 200V
- HBM 2KV

The charged capacitor is discharged through the specified resistance into the receiver module terminal to simulate an electrostatic discharge event.

■ Caution (Handling, Storage, and Soldering Precautions)

1. Store and use the device in an environment free from excessive mechanical stress that may cause deformation or degradation of product quality.
2. The maximum reflow soldering temperature is 260 °C (+0/−5 °C), with a maximum exposure time of 10 seconds, provided that the device has been stored for no more than 72 hours at 30 °C / 60% RH after opening the moisture-proof packaging.
3. When the ambient storage conditions exceed 30 °C / 60% RH, or when more than 72 hours have elapsed after opening the package, it is recommended to perform baking at 60 °C (±5 °C) and ≤5% RH for 96 hours prior to reflow soldering.
   This baking condition does not cause damage to the reel packaging.
4. Do not wash the device. If contamination occurs, gently wipe the diode surface using a soft, dry cloth.
5. The metal shield case must be properly connected to the PCB ground pattern.
   If the shield case is not grounded, the receiver module may exhibit degraded immunity under EMI (Electromagnetic Interference) conditions.
6. Ensure that soldering is performed within the specified ratings. Do not apply excessive mechanical force to the device after soldering.
7. To reduce noise from the power supply line, install a decoupling network between Vcc and GND.
   The recommended configuration is 47 μF (capacitor) and 100 Ω (series resistor).
   Decoupling components should be placed as close as possible to the receiver module.
8. Depending on the surrounding electromagnetic environment, reduced operating distance, increased output noise, or malfunction may occur.
9. To prevent damage to the internal pre-amplifier caused by electrostatic discharge (ESD), ensure that the human body and soldering equipment are properly grounded before handling the device.
10. This device must be handled in an ESD-controlled environment at all times.

■ Reflow Soldering

1 General Description

For reliable solder joint formation and to prevent thermal damage, reflow soldering shall be performed in accordance with the recommended lead-free reflow temperature profile described below.

Both the preheating and main heating stages must be carefully controlled to ensure uniform temperature distribution across the device.

2 Mechanical Stress Caution

Even when the reflow process is performed within the specified temperature profile, internal wire disconnection or package damage may occur due to mechanical stress caused by PCB warpage or bending.

Special attention shall be paid to the condition, alignment, and stability of the reflow soldering equipment during operation.

3 Recommended Lead-Free Reflow Temperature Profile

- The furnace temperatures for preheating and reflow heating shall be set in accordance with the temperature profile shown below.
- The **maximum peak temperature must not exceed 260 °C**.
- All temperature values in the profile represent the **actual temperature at the device surface**, not the furnace air temperature.
- Since a temperature difference may exist between the PCB and the mounted component, it is strongly recommended to verify that the device surface temperature is accurately measured.

Typical Reflow Temperature Profile (Pb-Free)

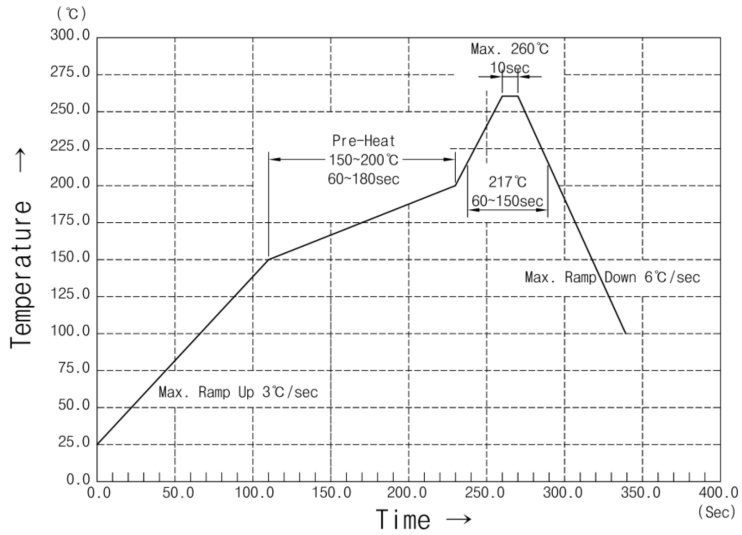

4 Loading Restriction During Reflow

Do not place any objects on top of the product during reflow soldering.
Excessive pressure or weight may cause deformation of the package resin while it is softened at elevated temperatures.

5 Multiple Reflow Process Limitation

If a second reflow soldering process is required, it must be completed within **8 hours** after finishing the first reflow soldering cycle.

6 Handling After Reflow

Handling of the product shall be performed **only after the PCB and device have sufficiently cooled down** to room temperature. Handling the product while hot may result in mechanical stress or damage.

■ Dimension

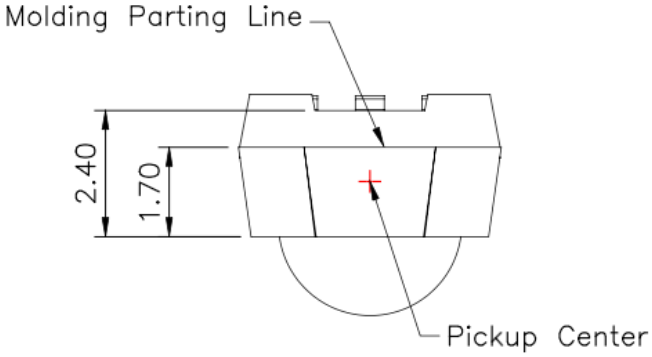

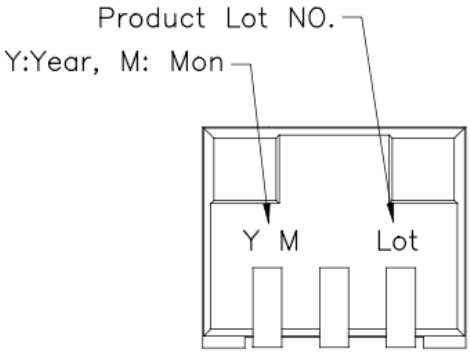

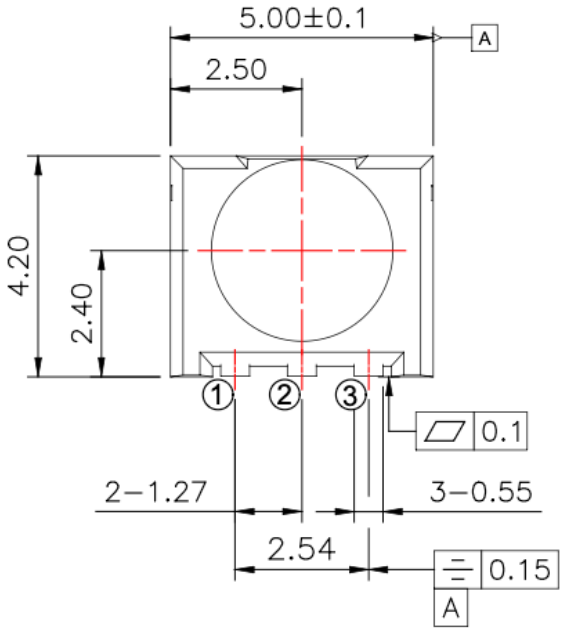

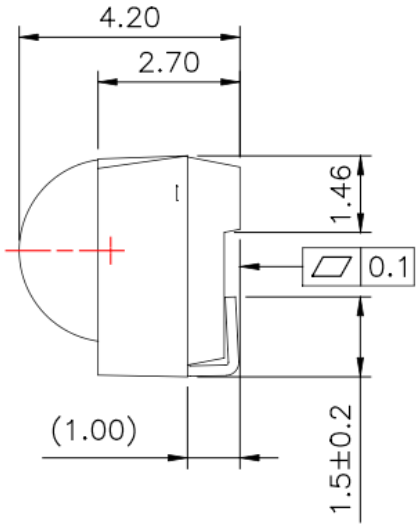

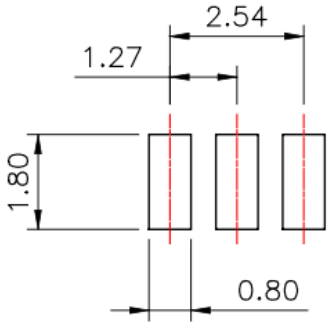

1. Unit : mm
2. Unspecified Talerance : ±0.15
3. Reference Dimension :( )
4. Electrode Base Material : SPCC
5. Electrode Terminal Finish : Sn Plating
6. PIN Configration
   1-Vout
   2-GND
   3-Vcc

■ Taping Dimensions

- Taping Version : Side View

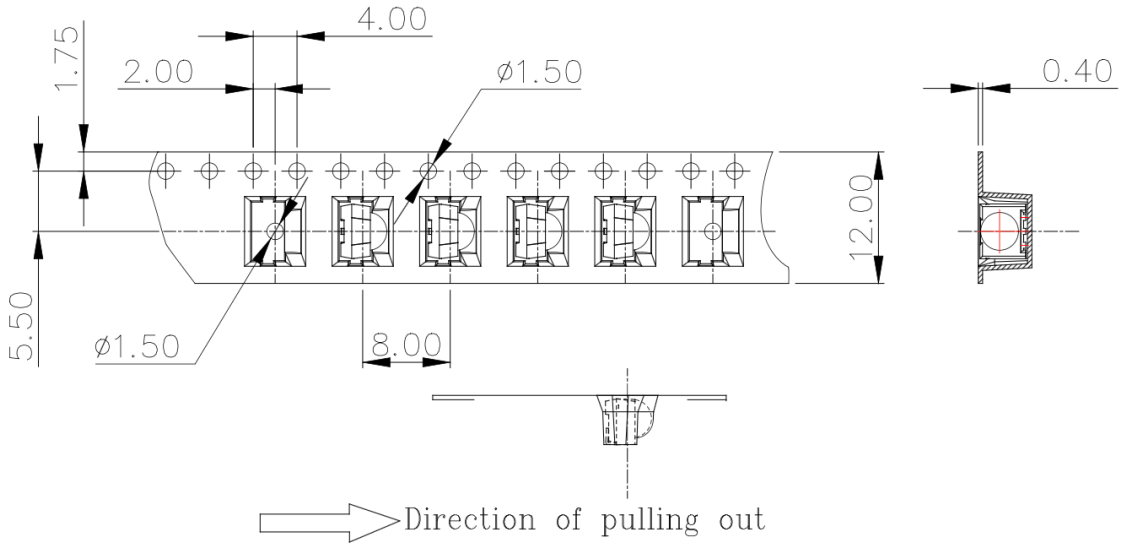

- Taping Version : Top View

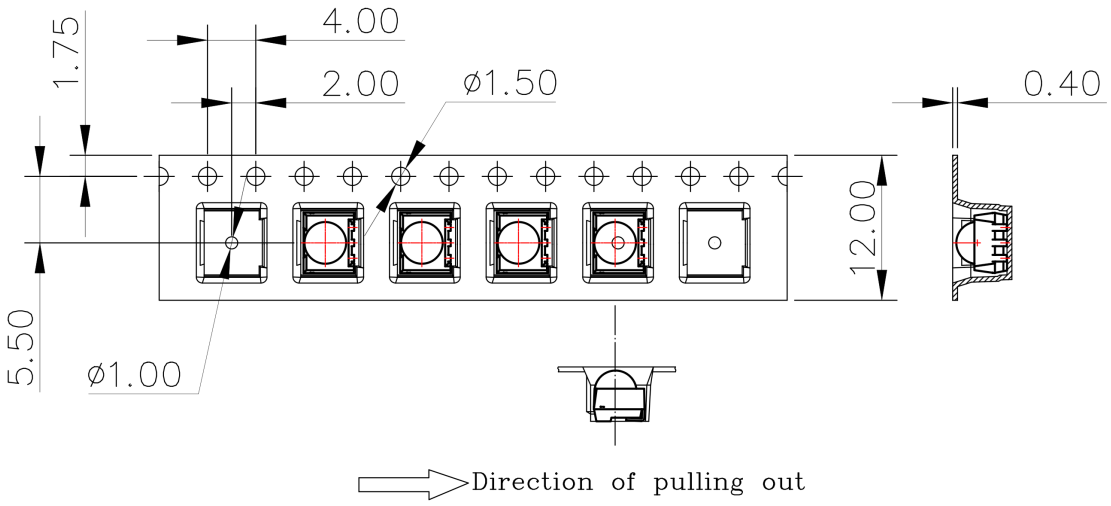

- Leader and Trailer dimensions

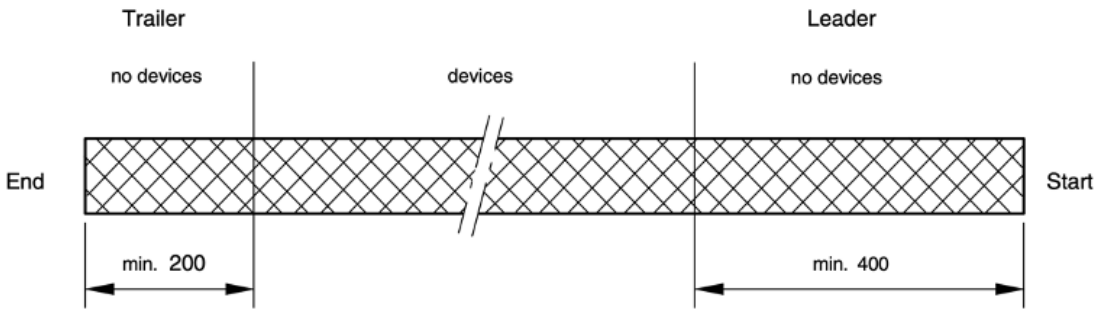

■ Reel Dimensions (in millimeters)

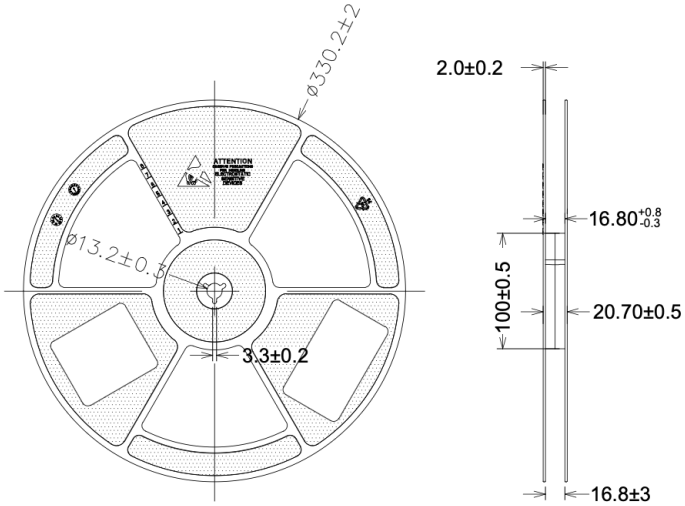

■ Packing

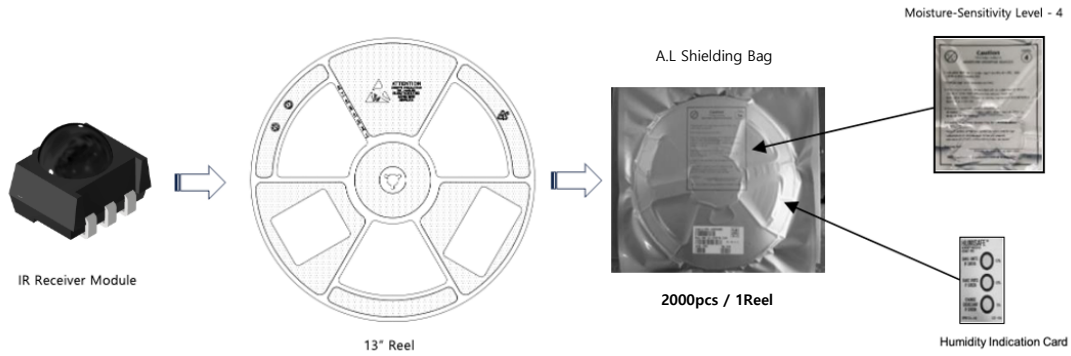

Moisture Sensitivity Level

This device is classified as MSL 4 according to JEDEC J-STD-020.
The floor life is 72 hours at ≤ 30 °C / ≤ 60 % RH after opening the moisture barrier bag.
If the floor life is exceeded, baking is required prior to reflow soldering.

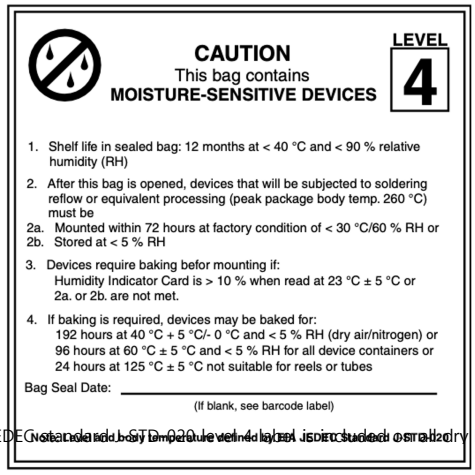

CAUTION
This bag contains
MOISTURE-SENSITIVE DEVICES

LEVEL 4

1. Shelf life in sealed bag: 12 months at < 40 °C and < 90 % relative humidity (RH)
2. After this bag is opened, devices that will be subjected to soldering reflow or equivalent processing (peak package body temp. 260 °C) must be
2a. Mounted within 72 hours at factory condition of < 30 °C/60 % RH or
2b. Stored at < 5 % RH
3. Devices require baking befor mounting if:
   Humidity Indicator Card is > 10 % when read at 23 °C ± 5 °C or
   2a. or 2b. are not met.
4. If baking is required, devices may be baked for:
   192 hours at 40 °C + 5 °C/- 0 °C and < 5 % RH (dry air/nitrogen) or
   96 hours at 60 °C ± 5 °C and < 5 % RH for all device containers or
   24 hours at 125 °C ± 5 °C not suitable for reels or tubes

Bag Seal Date: _____
(If blank, see barcode label)

Note: Moisture/moisture sensitive devices JEDEC J-STD-020 are included in small dry bags

EDA JEDEC standard J-STD-020 level 4 label is included in small dry bags

Packing Configuration

- **Inner Box Type**: Pizza-type cardboard box
- **Packing Quantity**: 10 inner boxes per outer box

ITEM	Material	Size(WxLxH mm)	Quantity
Plastic Reel	Polystyrene	13" X 16	2Kpcs/Reel
A.L Shielding Bag	Aluminum	450 X 500 X 0.2t	
Inner Box	Cardboard	430 X 430 X 30	2Kpcs/Reel
Outer Box	Cardboard	450 X 450 X 330	20Kpcs/Box

Packaging specifications may be changed according to order quantity and manufacturing conditions.

REVISION

NO.	Date	Page	Revision ITEM	Issued By	Appr'd By
1	2026.01.26		Issue (Ver 0.1)	Sam	Peter